CORE STYLE
AAG-200

FRAME STYLE
Core Only

MATERIAL:

FINISH:

DEPTH: **3/4”**

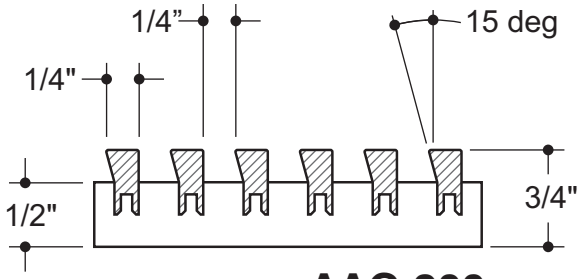

AAG 200
CORE ONLY

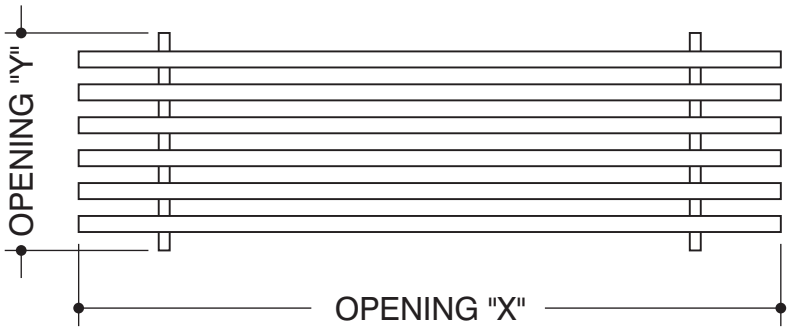

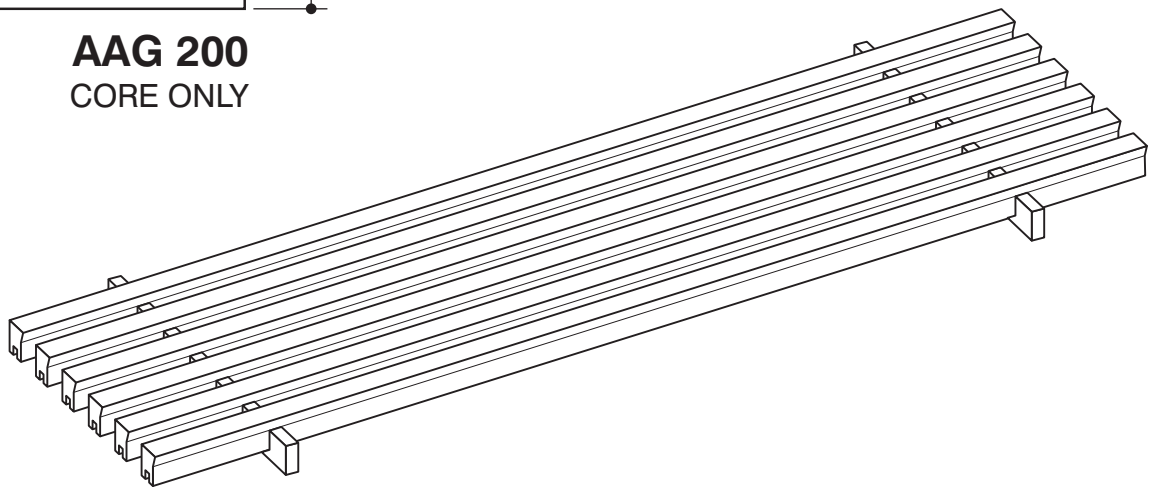

OPENING SIZES

QTY	X	Y

CUSTOMER:	PROJECT:	NOTES:
CONTACT:	ARCHITECT:	
	ENGINEER:	
PHONE:	CONTRACTOR:	

ADVANCED ARCHITECTURAL GRILLES
149 Denton Avenue
New Hyde Park, NY 11040
Voice: 516-488-0628 Fax: 516-488-0728

JOB #:

QUOTE #:

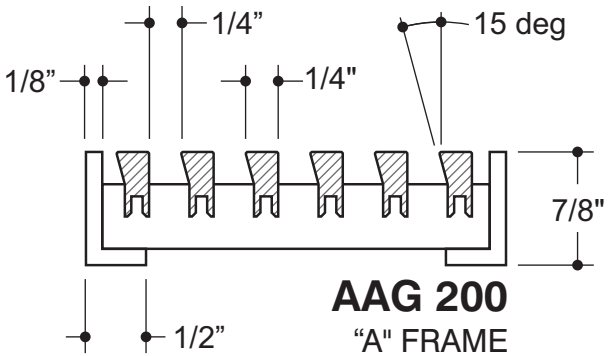

AAG 200
“A" FRAME

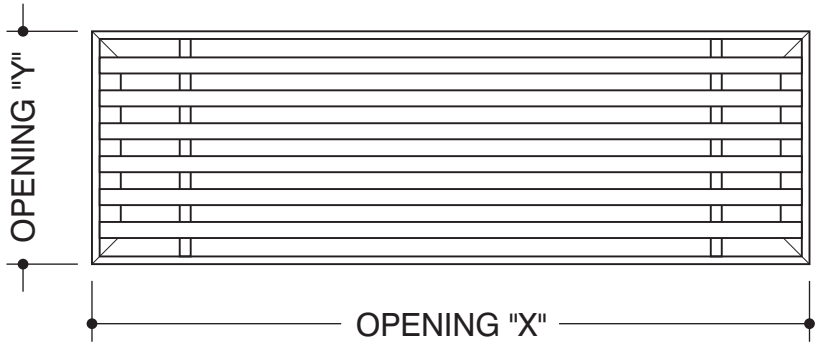

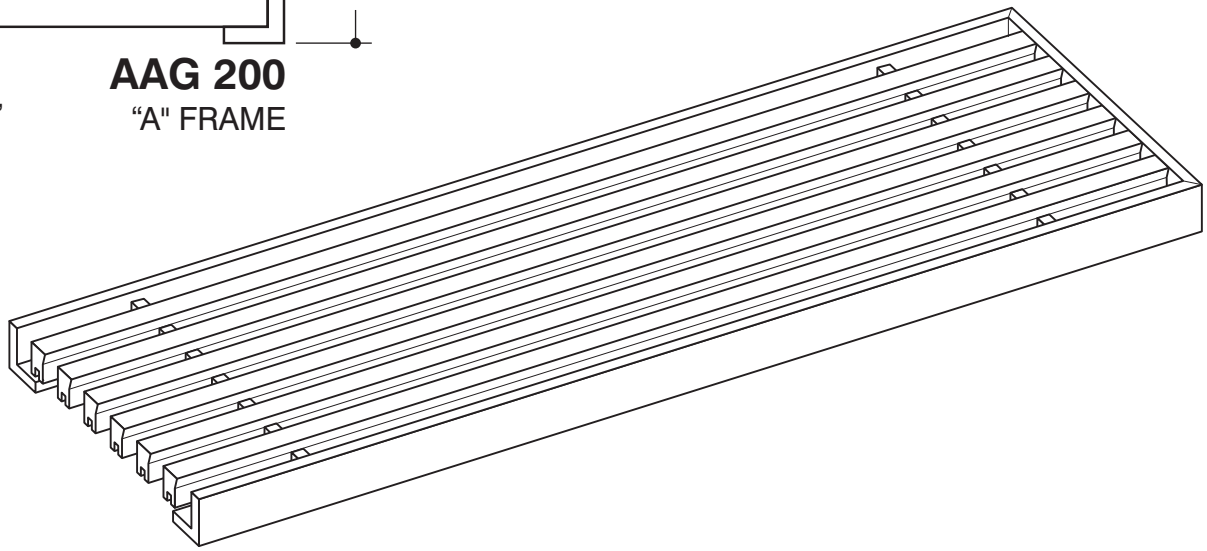

CORE STYLE
AAG-200

FRAME STYLE
"A"-frame

MATERIAL:

FINISH:

DEPTH: **7/8”**

OPENING SIZES

QTY	X	Y

CUSTOMER:	PROJECT:	NOTES:
CONTACT:	ARCHITECT:	
	ENGINEER:	
PHONE:	CONTRACTOR:	

ADVANCED ARCHITECTURAL GRILLES
149 Denton Avenue
New Hyde Park, NY 11040
Voice: 516-488-0628 Fax: 516-488-0728

JOB #:

QUOTE #:

www.advancedgrilles.com

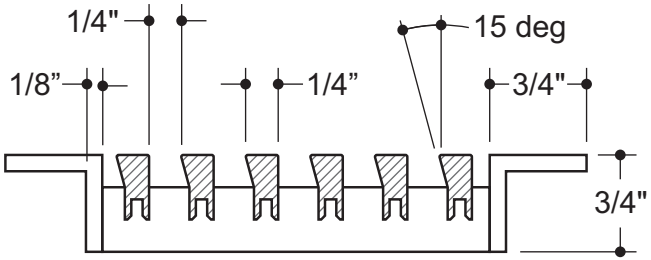

AAG 200
“B" FRAME

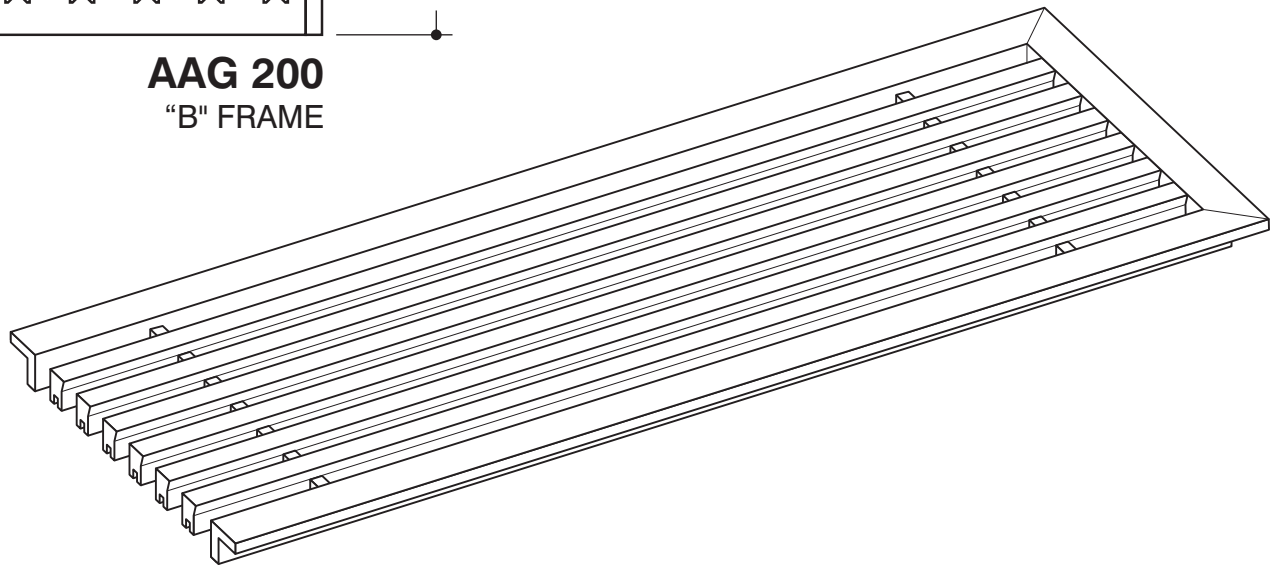

CORE STYLE
AAG-200

FRAME STYLE
"B"-frame

MATERIAL:

FINISH:

DEPTH: **3/4”**

OPENING SIZES

QTY	X	Y

CUSTOMER:	PROJECT:	NOTES:
CONTACT:	ARCHITECT:	
	ENGINEER:	
PHONE:	CONTRACTOR:	

ADVANCED ARCHITECTURAL GRILLES
149 Denton Avenue
New Hyde Park, NY 11040
Voice: 516-488-0628 Fax: 516-488-0728

JOB #:

QUOTE #:

CORE STYLE
AAG-200

FRAME STYLE
"C"-frame

MATERIAL:

FINISH:

DEPTH: **7/8”**

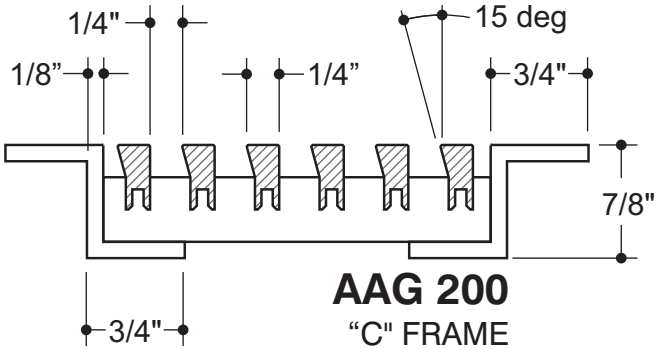

AAG 200
“C" FRAME

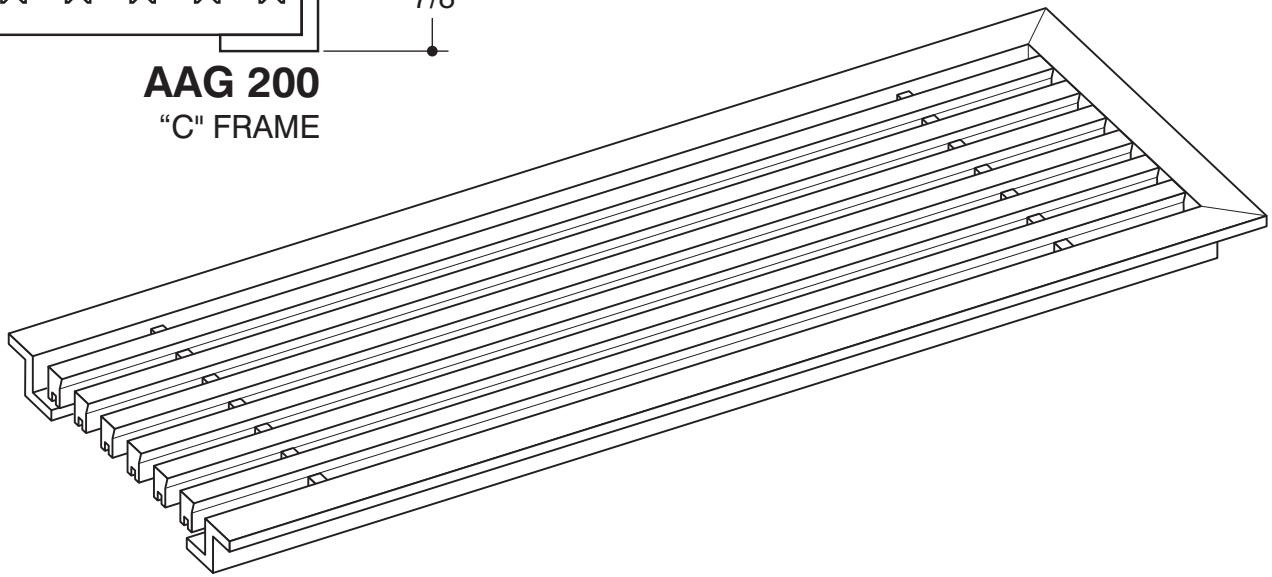

OPENING SIZES

QTY	X	Y

CUSTOMER:	PROJECT:	NOTES:
CONTACT:	ARCHITECT:	
	ENGINEER:	
PHONE:	CONTRACTOR:	

ADVANCED ARCHITECTURAL GRILLES
149 Denton Avenue
New Hyde Park, NY 11040
Voice: 516-488-0628 Fax: 516-488-0728

JOB #:

QUOTE #:

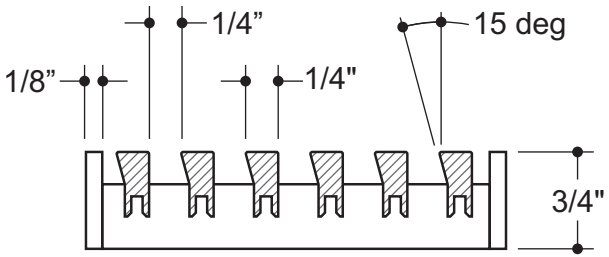

AAG 200
BAND FRAME

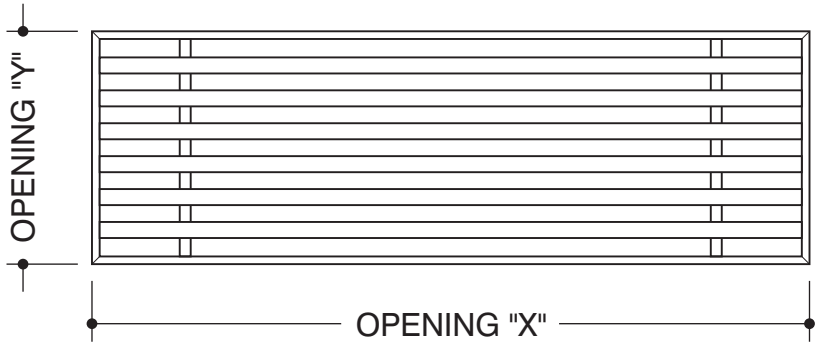

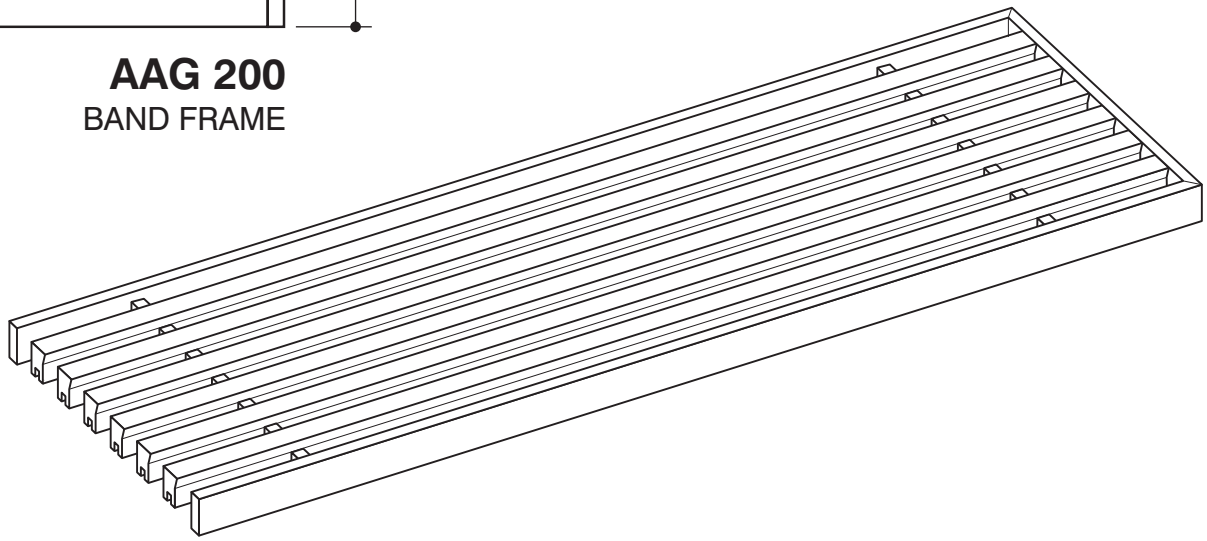

CORE STYLE
AAG-200

FRAME STYLE
Band Frame

MATERIAL:

FINISH:

DEPTH: **3/4”**

OPENING SIZES

QTY	X	Y

CUSTOMER:	PROJECT:	NOTES:
CONTACT:	ARCHITECT:	
	ENGINEER:	
PHONE:	CONTRACTOR:	

ADVANCED ARCHITECTURAL GRILLES
149 Denton Avenue
New Hyde Park, NY 11040
Voice: 516-488-0628 Fax: 516-488-0728

JOB #:

QUOTE #: